CP6302-0001-0010-D100/D106-M262
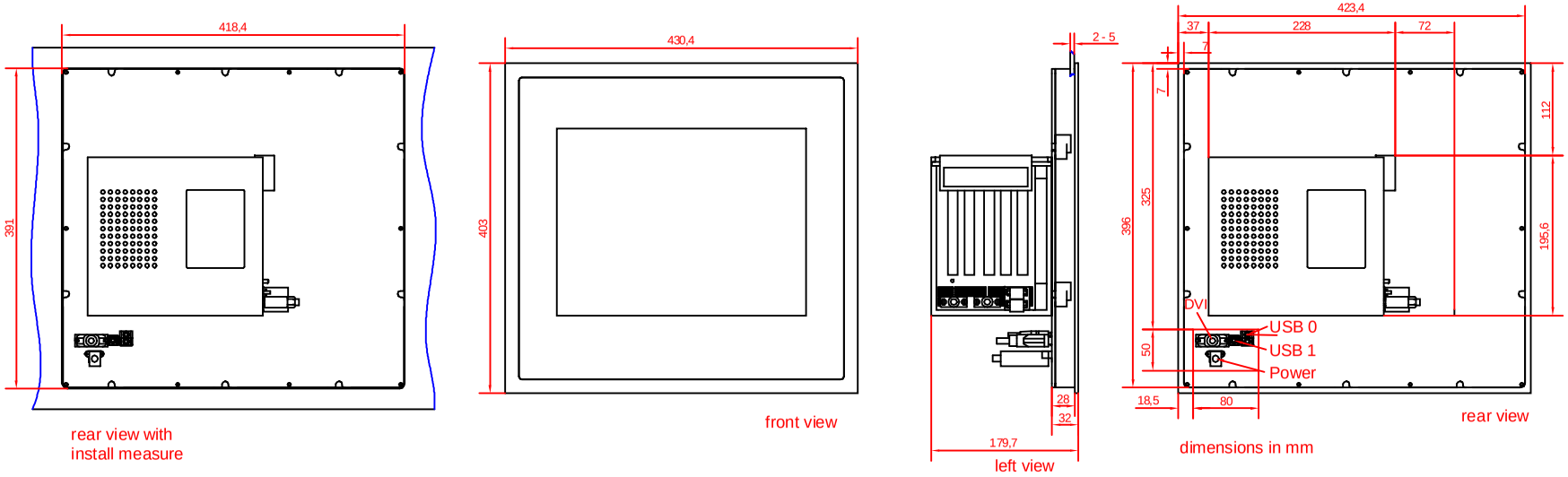
main dimensions